ANSxy100lr/LT xy-Scanner made from Titanium

1000352

Technical Specifications

Size and Dimensions	
footprint; height	24 mm x 24 mm; 10 mm
maximum installation space	24 mm x 24 mm; 10 mm
weight	18 g
height	10 mm
Materials	
positioner body	titanium
actuator	PZT ceramics
connecting wires	insulated twisted pair, copper
Fine Positioning Mode	
fine linear positioning range @ 300 K	50 x 50 µm
fine linear positioning range @ 4 K	30 x 30 µm
fine positioning resolution	sub-nm
typical actuator capacitance fine @ 300 K	5.55 µF
typical actuator capacitance fine @ 4 K	0.75 µF
input DC voltage range @ 300 K	0 - 60 V
input DC voltage range @ 4 K	0 - 150 V
*	scan range depends on environment
Load (@ ambient conditions)	
maximum load	100 g
General Specifications	
environment	/LT

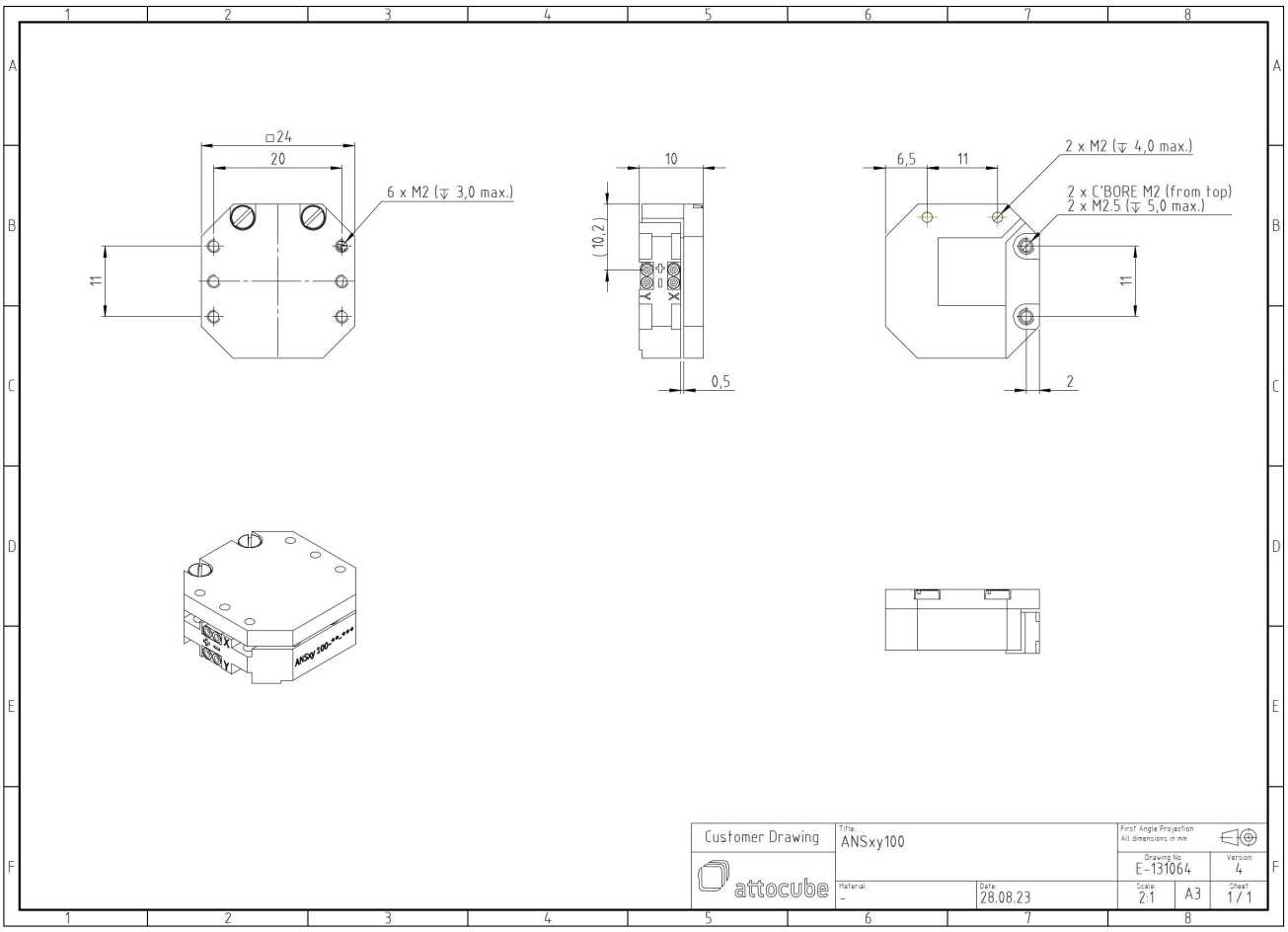

All rights, including rights created by patent grant or registration of a utility model or design as well as rights of technical modifications are reserved. Delivery subject to availability. Designations may be trademarks, the use of which by third parties for their own purposes may violate the rights of the trademark owners. © attocube systems AG