ANRv51/LT/HV - rotator (360° endless)

1003301

Technical Specifications

Size and Dimensions	
footprint; height	10 mm x 20 mm; 21 mm
weight	10 g
height	21 mm
Materials	
positioner body	titanium
actuator	PZT ceramics
connecting wires	insulated twisted pair, copper
Coarse Positioning Mode	
travel range (step mode)	360 ° endless
maximum drive velocity @ 300 K	~ 10 °/s
input voltage range	0 - 60 V
Fine Positioning Mode	
fine angular positioning range @ 300 K	40 m°
fine angular positioning range @ 4 K	6 m°
fine positioning resolution	µ°
input DC voltage range @ 300 K	0 - 60 V
input DC voltage range @ 4 K	0 - 150 V
Load (@ ambient conditions)	
maximum load	20 g
maximum dynamic torque around axis	0.2 Ncm
General Specifications	
environment	/LT/HV

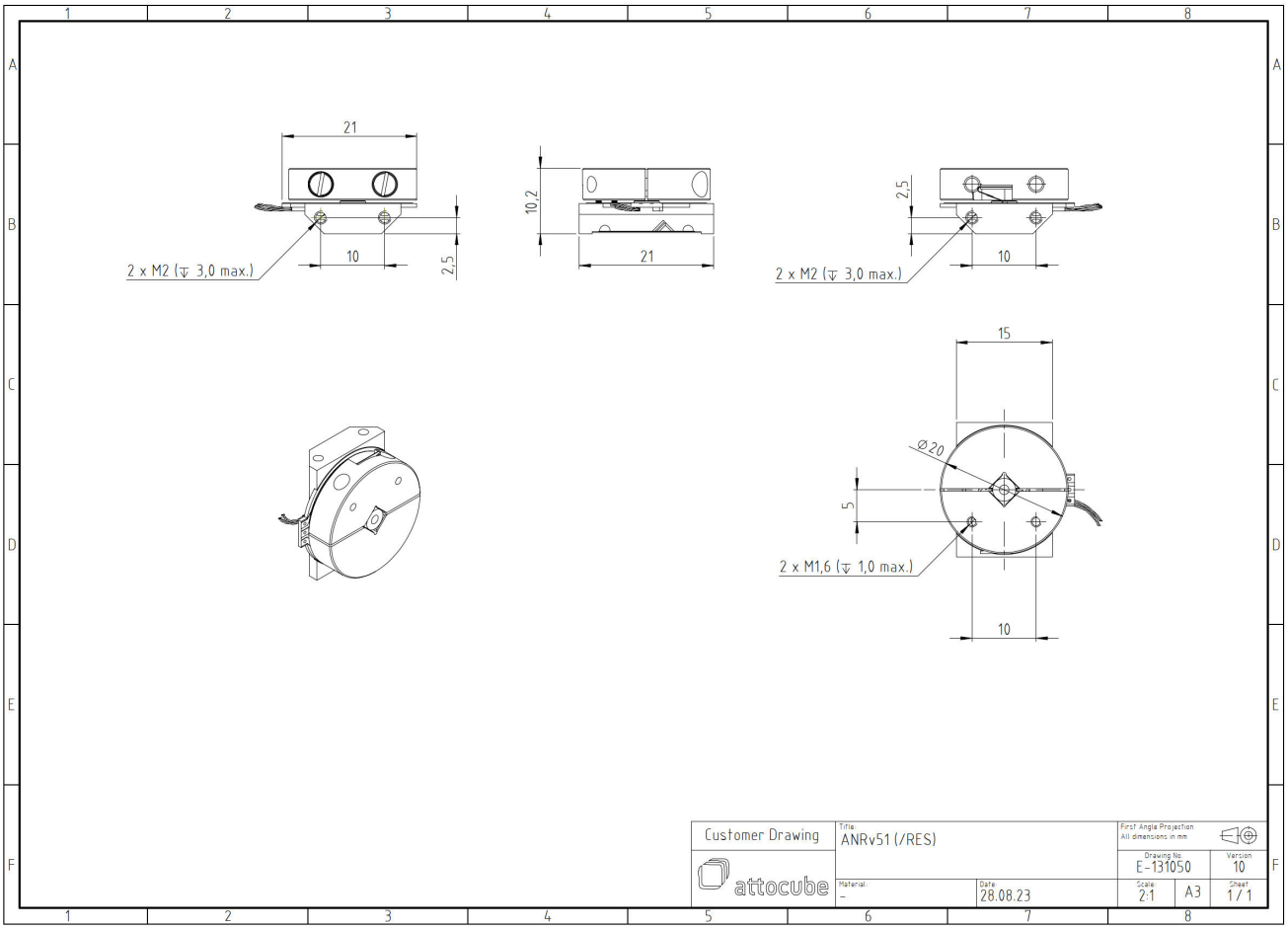

All rights, including rights created by patent grant or registration of a utility model or design as well as rights of technical modifications are reserved. Delivery subject to availability. Designations may be trademarks, the use of which by third parties for their own purposes may violate the rights of the trademark owners. © attocube systems AG