# ANR240/RT - rotator (360° endless)

1004092

## Technical Specifications

| | |
|---|---|
| Size and Dimensions | |
| footprint; height | 35 mm x 35 mm; 13.5 mm |
| weight | 68 g |
| height | 13.5 mm |
| Materials | |
| positioner body | beryllium copper & titanium |
| actuator | PZT ceramics |
| connecting wires | insulated twisted pair, copper |
| Coarse Positioning Mode | |
| travel range (step mode) | 360 ° endless |
| maximum drive velocity @ 300 K | ~ 30 °/s |
| input voltage range | 0 - 60 V |
| Fine Positioning Mode | |
| fine angular positioning range @ 300 K | 30 m° |
| fine positioning resolution | µ° |
| input DC voltage range @ 300 K | 0 - 100 V |
| Load (@ ambient conditions) | |
| maximum load | 200 g |
| maximum dynamic torque around axis | 2 Ncm |
| General Specifications | |
| environment | /RT |

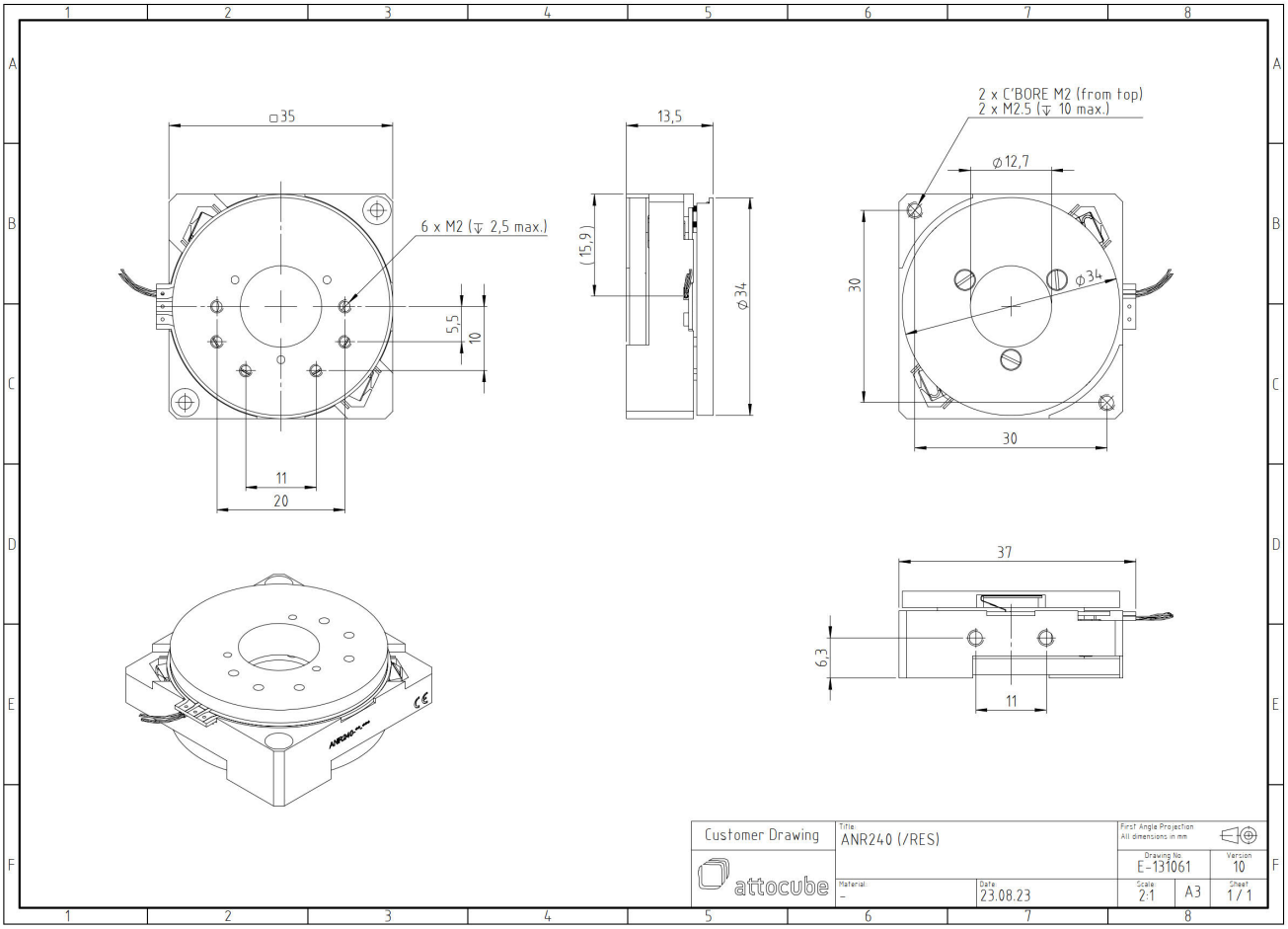


All rights, including rights created by patent grant or registration of a utility model or design as well as rights of technical modifications are reserved. Delivery subject to availability. Designations may be trademarks, the use of which by third parties for their own purposes may violate the rights of the trademark owners. © attocube systems AG