ANGt101/LT/HV - goniometer for "theta" tilting

1002736

Technical Specifications

Size and Dimensions	
footprint; height	24 mm x 24 mm; 11 mm
distance center of rotation to top	40 mm
maximum installation space	28.6 mm x 24 mm; 11.8 mm
weight	18 g
height	11 mm
Materials	
positioner body	titanium
actuator	PZT ceramics
connecting wires	insulated twisted pair, copper
Coarse Positioning Mode	
travel range (step mode)	6.6 °
maximum drive velocity @ 300 K	~ 1 °/s
input voltage range	0 - 60 V
Fine Positioning Mode	
fine positioning resolution	no fine positioning capability
Load (@ ambient conditions)	
maximum load	100 g
maximum dynamic force along the axis	2 N
General Specifications	
environment	/LT/HV

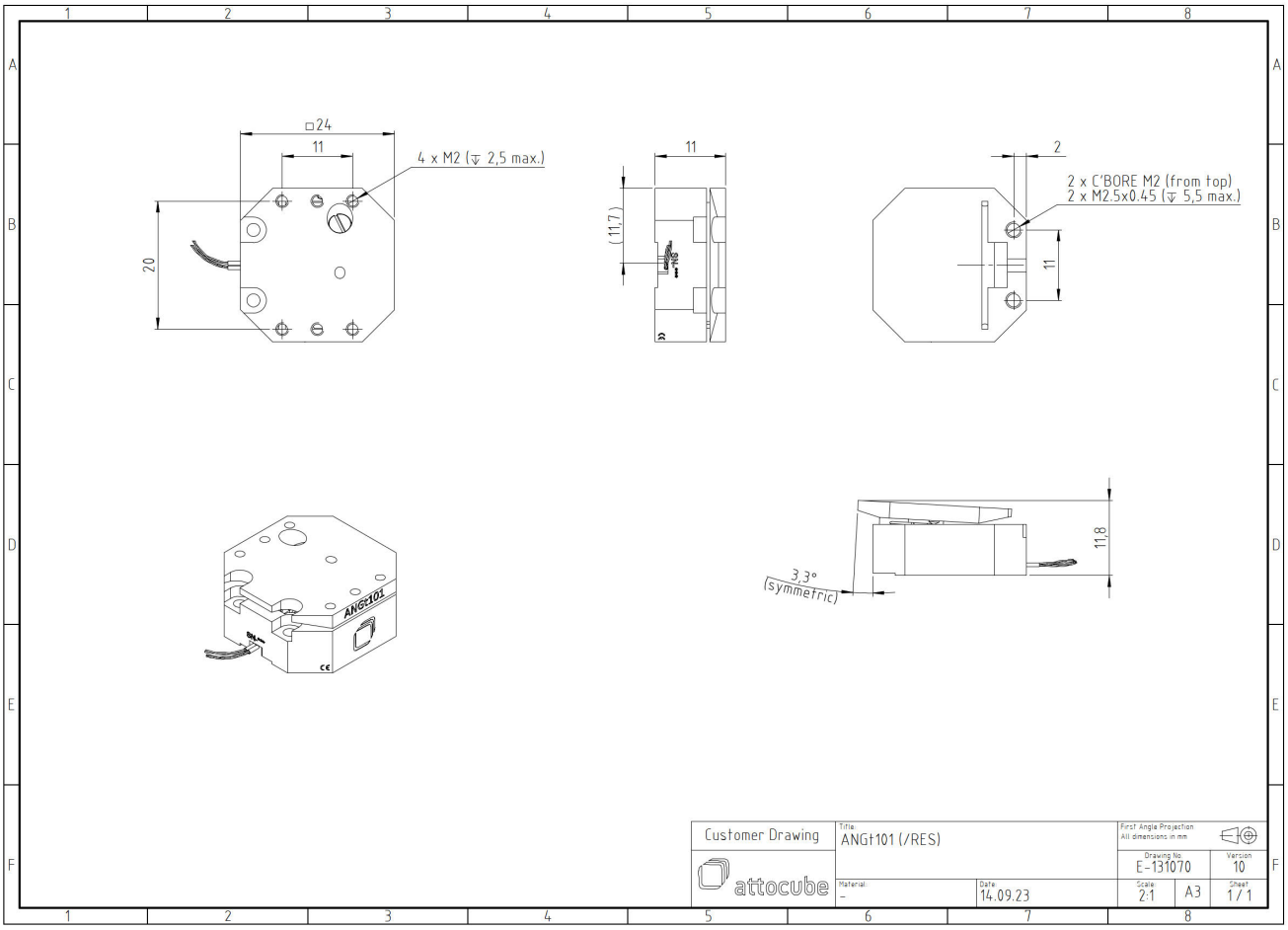

All rights, including rights created by patent grant or registration of a utility model or design as well as rights of technical modifications are reserved. Delivery subject to availability. Designations may be trademarks, the use of which by third parties for their own purposes may violate the rights of the trademark owners. © attocube systems AG